- Agromek prisen 2008
- Agromek prisen 2010
- DK CSR Award 2012
- Baltic manure Award 2012
- EU CSR Award 2013

BioCover a|s

Agromek prize_winner
2008 and 2010

Why are we doing this?

IPCC climate panel: Planetary boundaries

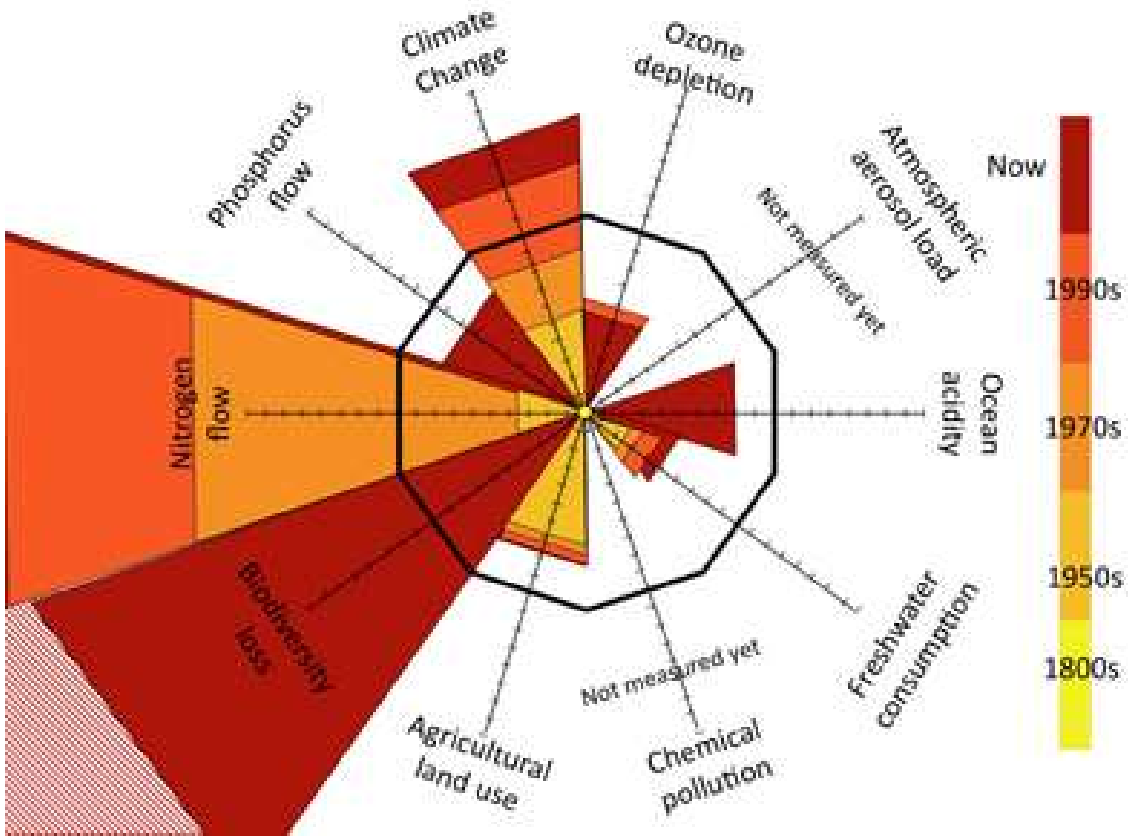

SyreN

Crystal

SyreN Crystal adjusts the nutrients values of slurry on site through a unique an automatic process control.
The use of the chemical properties of fertilizer industry raw materials direct in the consumer end optimises slurry logistic, economy and reduces / eliminates negative environmental effects from slurry application.

BioCover a|s

SyreN Crystal Technologies

- Acidification
- Additives
- Gas to liquid absorption
- Precipitation
- Dissolvent

Swine Slurry

Other slurries

- Separation
- Oxidization
- Granulating

Used as individual technologies or in a range of combinations

SyreN Crystal Technologies

Slurry Liquid → pH adjustment → Additives Precipitation → Additives Acidification of slurry → Nutrient adjusted sustainable slurry application

↓

Acidification of struvite

↓

Liquid ammonia

↓

Dissolved NP liquid fertilizer → NPS + mg starter fertilizer for mais

Liquid fraction of Swine Slurry < 30 % reduction of P

SyreN Crystal Technologies

- Acidification

Slurry acidification

- **Technology exclusively use in Denmark**
- **3 segments – 5 Manufactures**

	No systems (estimate)	Volume m3 (estimate)	% of years production (35 mill m3)	m3 / system L acid/m3 2015
		2015	2015	
Barn acidification	120	1.200	3.4	10.000 / 4.0
Storage acidification	80	2.000	5.7	20.000 / 3
Field acidification	140 **(116 SyreN)**	4.500	12.8	32.000/1.5
Total		7.700	21.9	17 mill L acid

SyreN system – Field acidification

Adjustment of pH during application of slurry

Danish trails: pH 6.4 most economical
pH 6.0 optimal emission reduction

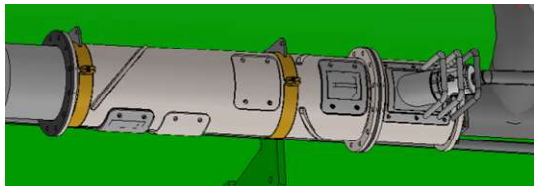

SyreN system

Sulphuric acid

loading system

How are we doing?

Member State	NH_3 reduction compared with 2005		
	For any year from 2020 to 2029		For any year from 2030
Belgium	2%		16%
Bulgaria	3%		10%
Czech Republic	7%		35%
Denmark	24%		37%
Germany	5%		39%
Estonia	1%		8%
Greece	7%		26%
Spain	3%		29%
France	4%		29%
Croatia	1%		24%
Ireland	1%		7%
Italy	5%		26%
Cyprus	10%		18%
Latvia	1%		1%
Lithuania	10%		10%
Luxemburg	1%		24%
Hungary	10%		34%
Malta	4%		24%
Netherlands	13%		25%
Austria	1%		19%
Poland	1%		26%
Portugal	7%		16%
Romania	13%		24%
Slovenia	1%		24%
Slovakia	15%		37%
Finland	20%		20%
Sweden	15%		17%
United Kingdom	8%		21%
EU 28	6%		27%

EU emission reduction commitments for ammonia (NH3)

Incentive structures: in Denmark

- ~~Kvota on use of nitrogen~~
- Mandatory Injection or acidification of slurry on grass and black soil
- ~~Environmental planning permission~~
- ~~40% subsidy on purchase of system~~

EU emission reduction requierment

NH3	2020	2030
Denmark	24 %	~~37 %~~ 24%
EU	6 %	27 %

How are we doing?

EU exceeds international ammonia emissions limit

In 2014, the EU exceeded for the first time its ammonia emissions (NH_3) limit fixed under the Gothenberg Protocol to the UNECE Long-Range Transboundary Air Pollution Convention (LRTAP). Germany, Finland, Spain and the Netherlands also exceeded their individual ammonia emissions ceilings (by 35%, 14%, 5% and 5%). EU ammonia emissions increased by 0.9% from 2013 to 2014. The European Environment Agency indicates that 94% of EU ammonia emissions come from agriculture. This EU failure to respect its international obligations can be expected to progressively put pressure, via future revisions of the National Emission Ceilings Directive (NEC), to prevent ammonia emissions in manure storage, treatment and spreading, and so provide a driver for nitrogen recovery and recycling.

European Environment Agency (EEA) Technical Report 16/2016 European Union emission inventory report 1990–2014 under the UNECE Convention on Long-range Transboundary Air Pollution (LRTAP)

Future of Field acidification

New "German Version" of Acidification for 2017

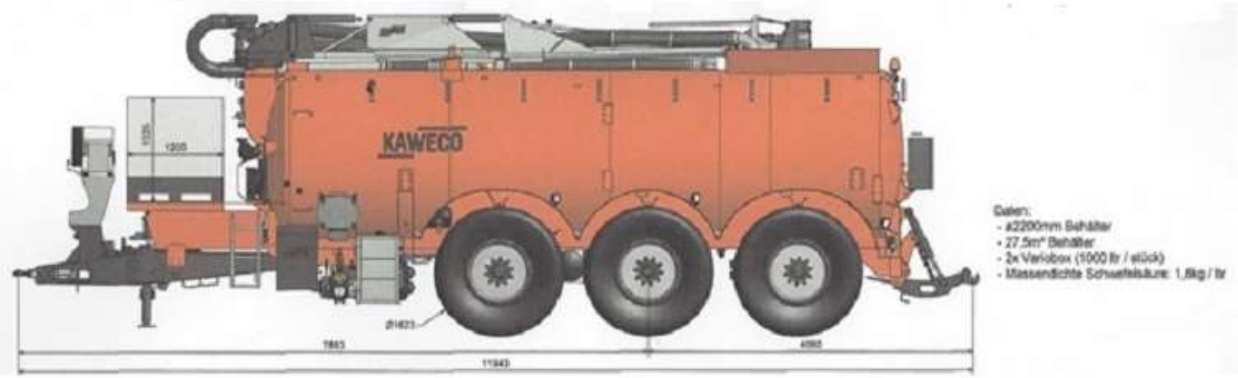

Think of **sulphuric acid**
as **AdBlue for slurry!**

- **Additives**

Reduced leaching of nitrogen	Nitrogen inhibitors
Manganese deficiency	Manganese nitrate
Reduced odor	Iron sulfate
Precipitation of phosphorus	Magnesium chloride

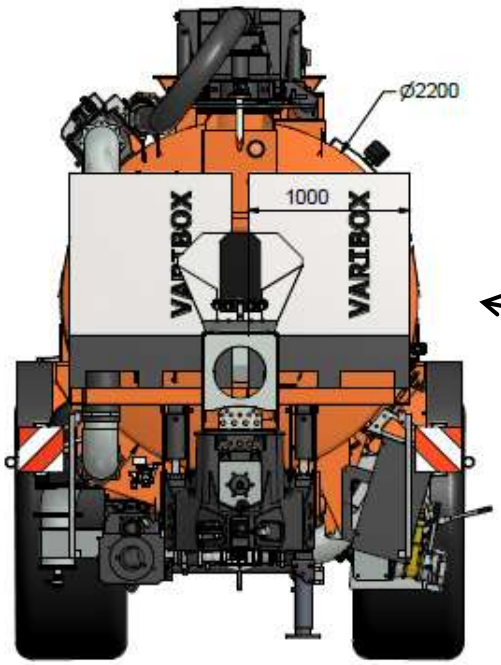

2 x mobile tanks - Flexible for choice of combinations of additives

SyreN Crystal Technologies

SyreN Crystal Technologies

- **Gas to liquid absorption**
  Injection of anhydrous ammonia

SyreN Crystal Technologies

Effect – SyreN Crystal Technologies

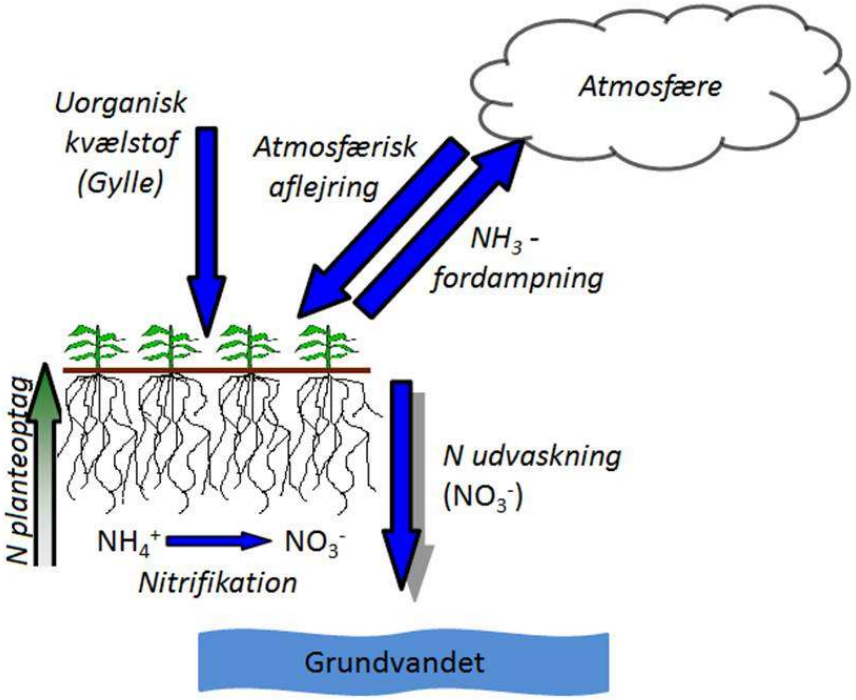

- Ammonia emission reduction
- Ammonium nitrogen replaces nitrate nitrogen
- Ammonium nitrogen stabiliser.

Variation: 10 – 80 kg pr. Ha / year

Average reduction in nitrogen eutrophication

24 kg pr. Ha (Denmark)
40 kg pr. Ha (EU)

SyreN Crystal Technologies: Precipitation

28 m3 Slurry tanker divided into 3 tanks:

Mixing tank 7.5 m3

Struvite precipitation tank 15 m3

Settlement- and dissolvent tank 5.5 m3

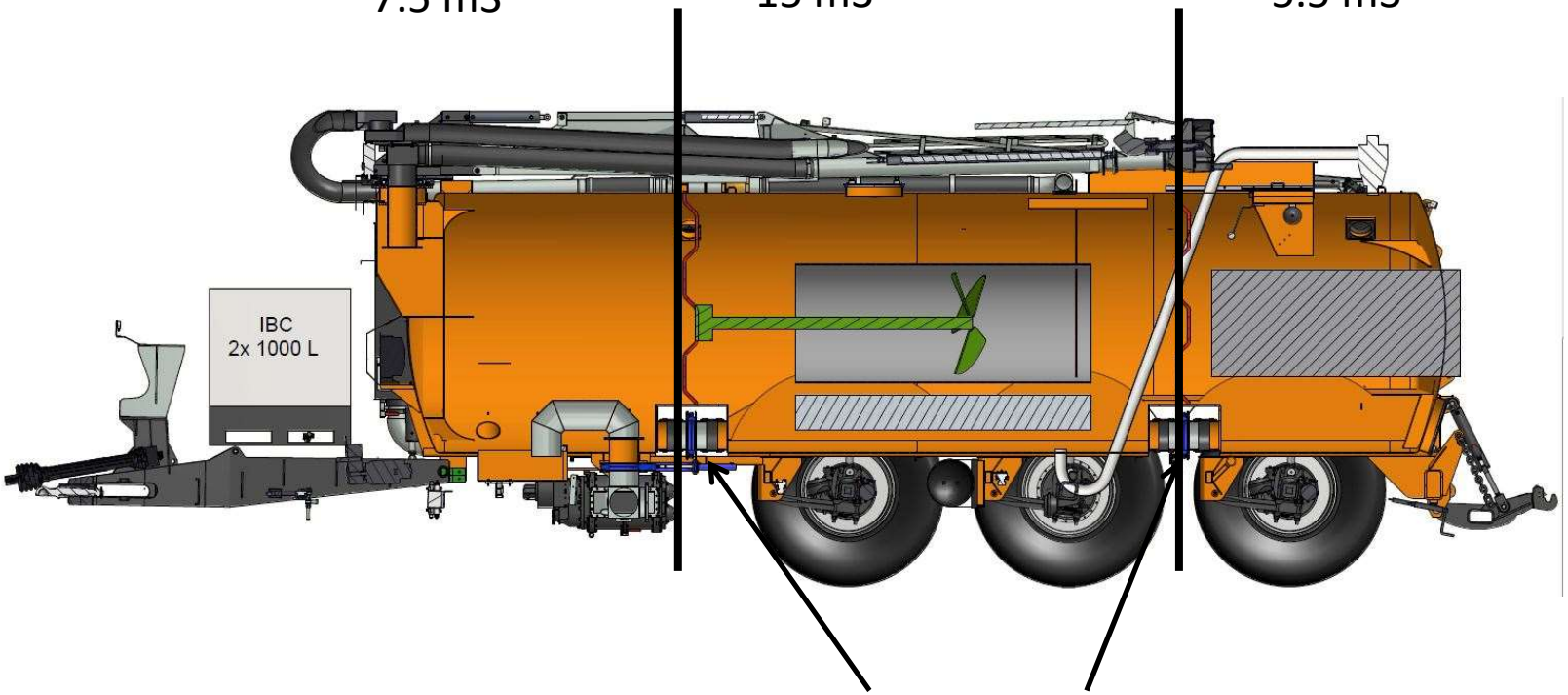

Valves to open and close between tanks – change between slurry application and precipitation

SyreN Crystal Technologies: Pre-mixing tank

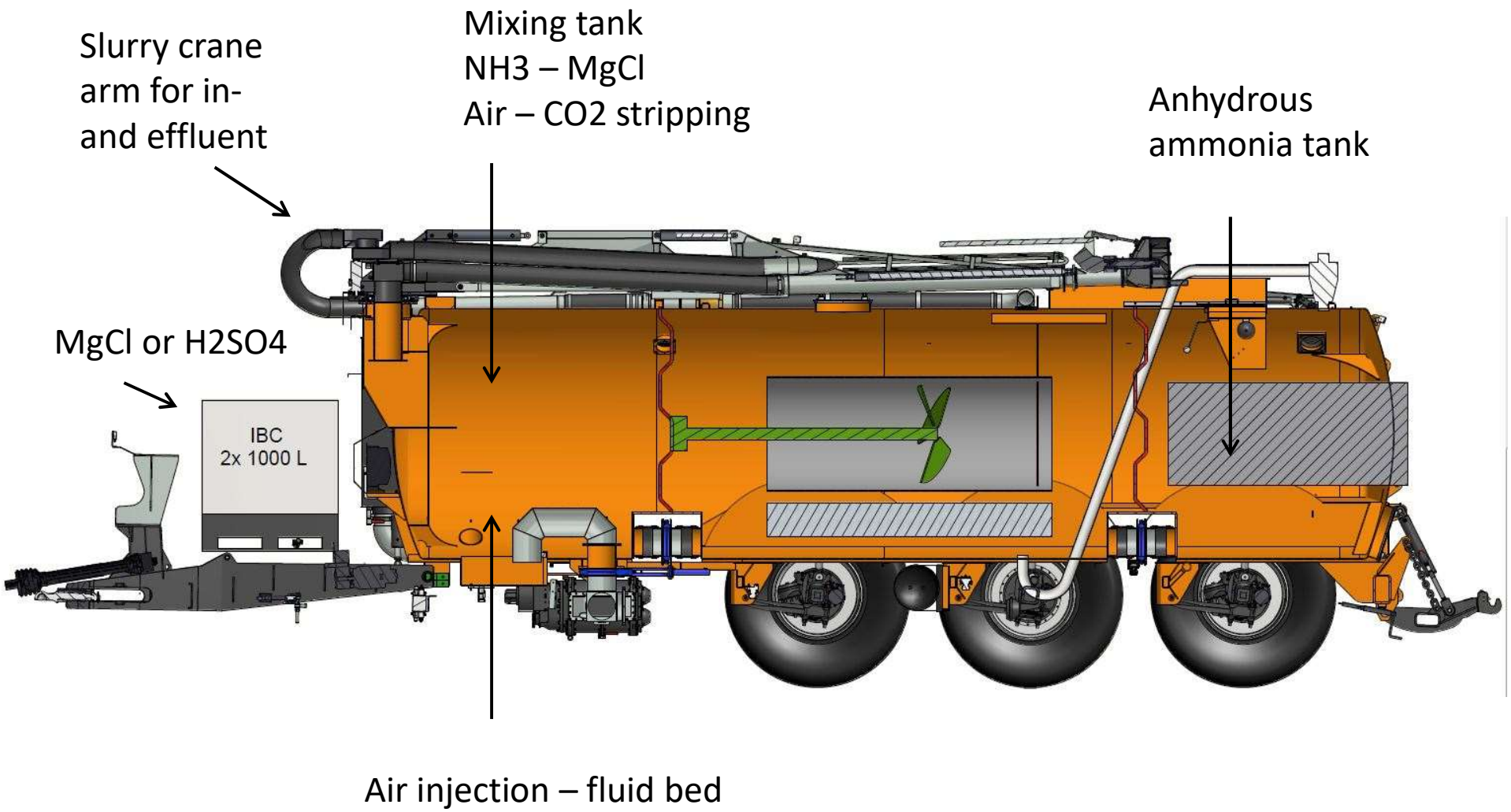

SyreN Crystal Technologies: Precipitation reactor

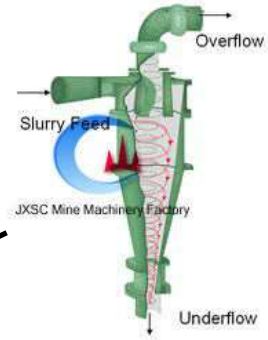

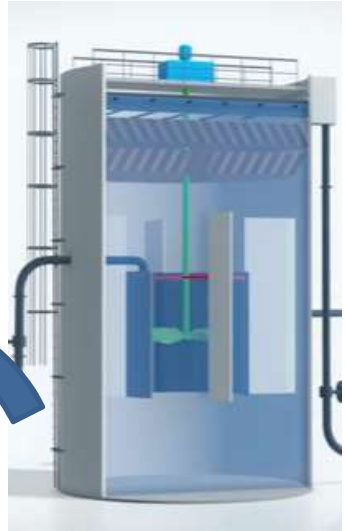

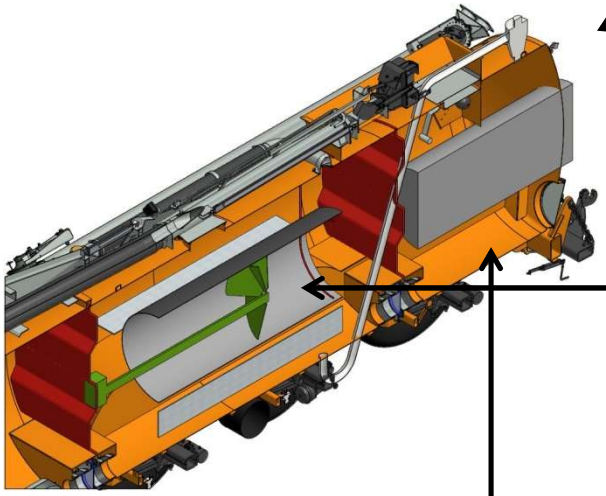

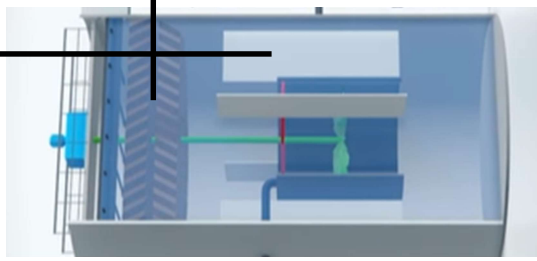

Struvia reactor

Magnesium + Ammonia + Phosphorus = Struvite (MAP)

SyreN Crystal Technologies: Dissolvent tank

Dissolvent tank: Capacity: 3.000 l

Dissolvent of struvite crystal with sulphuric acid and water 1:1:1 = fluid NPKS 1.4-4-0-4 + 2 Mg

Addition of anhydrous ammonia:

- Neutralises acidity
- Flexible fluid NPKS mixture – example:
  Starter fertiliser NPKS 17.4.0.4 + 2 Mg

Air injection – fluid bed while dissolving

SyreN Crystal: Different strategy

Major areas of difference from status quo:

- Aim to **adjust** N:P ratio I slurry by:
  - Increase N
  - Increase N and decrease P
  - Decrease N and P
- Incorporated into existing operation means limited capital- or variable expenses
- Scaling of struvite no problem
- Small- or large crystals – Hydro cyclone and clearing tank
- Variable P recovery rate of 10 - 90%
- pH increase / decrease within 1 minute
- Mobile

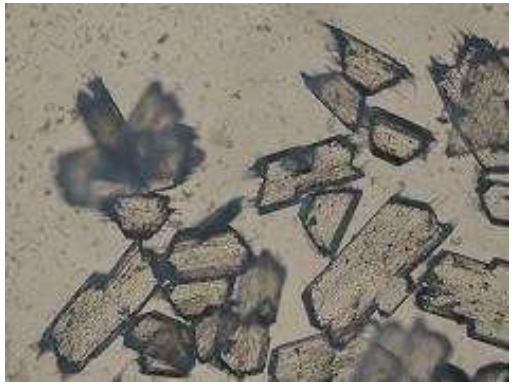

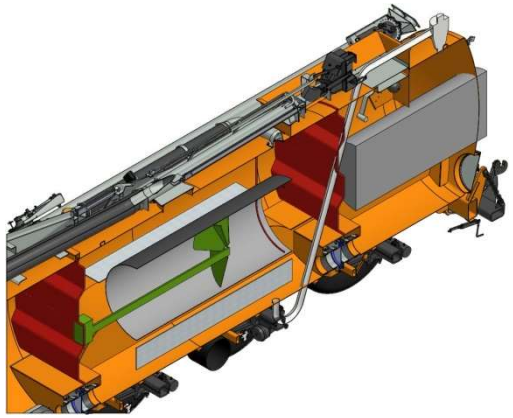

SyreN Crystal Technologies: Application

Opening of tank divisions = standard slurry tanker

SyreN Crystal Technologies

Slurry Liquid → pH adjustment → Additives Precipitation → Additives Acidification of slurry → Application of nutrient adjusted sustainable slurry

↓

Acidification of struvite

↓

Liquid ammonia

↓

Dissolved NP liquid fertilizer →

NPS + mg starter fertilizer for maiz

Liquid fraction of Swine Slurry < 30 % reduction of P

Separation, addition of K and drying of dry matter

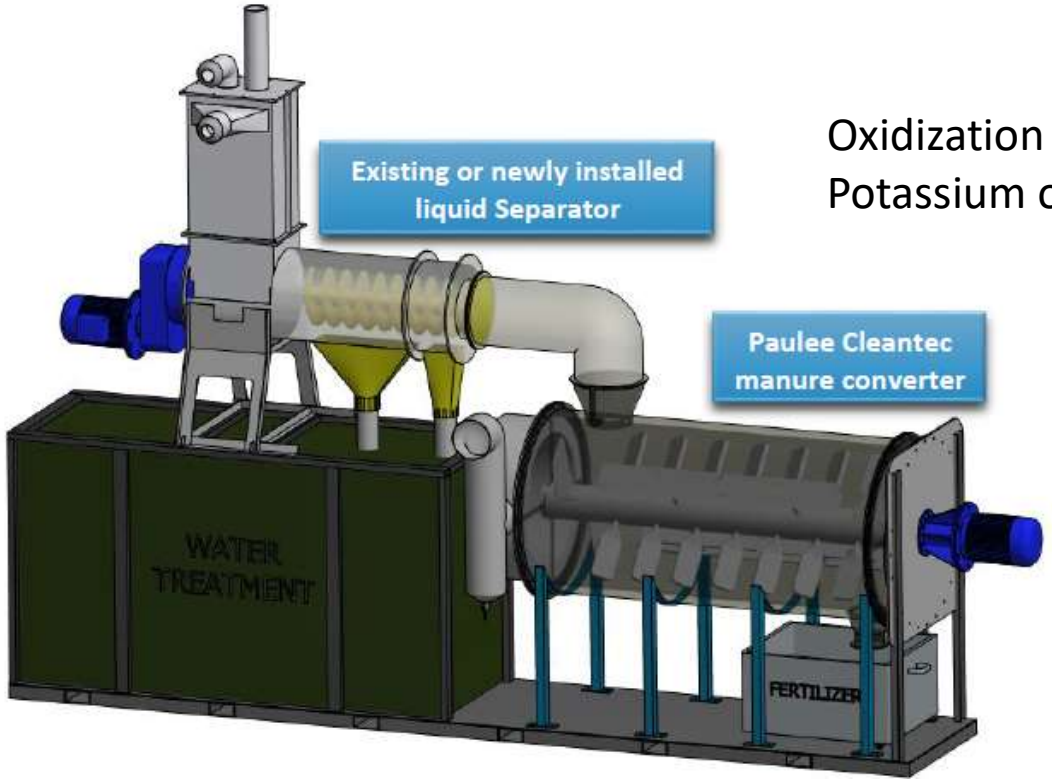

Oxidization with
Potassium oxide

99% dry matter powder
ready for granulating

SyreN Crystal Project: Granulating

Many types of small mobile organic granulation equipment available

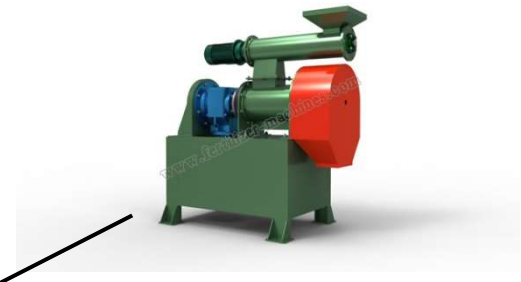

Big bag packaging equipment

standard granular fertilizer application

SyreN Crystal Technologies: Project

Acidification of slurry liquid →

pH adjustment →

Additives MgCl

Precipitation →

Additives

Acidification of slurry →

Application of nutrient adjusted sustainable slurry 20 – 40 m3/ha

↓

Acidification of struvite NPKS 1.4-4-0-4 + 2 Mg

↓

Liquid ammonia

↓

Dissolved NPS + Mg liquid fertilizer →

↓

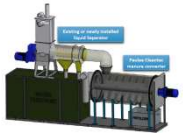

Separation of Dry matter NPKS 2-2-2 →

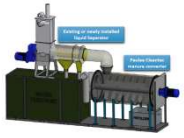

Potassium Oxidization NPKS 2-2-6 →

Granulating - Eks: NPKS 17.4.6.2 + 1 mg + C →

Standard starter fertilizer for maiz

standard granular fertilizer application

SyreN Crystal Project: Additives

SyreN Crystal Concept:	Fertilizer industry raw materials
Slurry liquid	NPK
Anhydrous ammonia	N
Sulphuric acid	N + SO4
Nitrogen inhibitor	N
Magnesium Chloride	MgCl
Air	O2
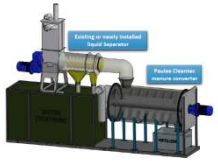	
Energy	
Slurry Dry Matter	NPK
Potassium oxide	KO2
Energy	
Water	H2O

SyreN Crystal Project: Cost of equipment

Technology stage	Expected price	Expected capacity / Cost
Prototype	Addition to standard slurry tanker: 150.000 Euro	50.000 m3 pr. year Units needed for treatment of all EU slurry: 20.000 = 20.000 new jobs Cost of treatment pr. m3: 0 – 5 Euro
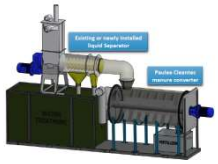 Prototype	Separation and oxidization equipment : 20.000 Euro	
Market ready	Granulation and packaging equipment: 10.000 Euro	

N+P emission = Eutrophication

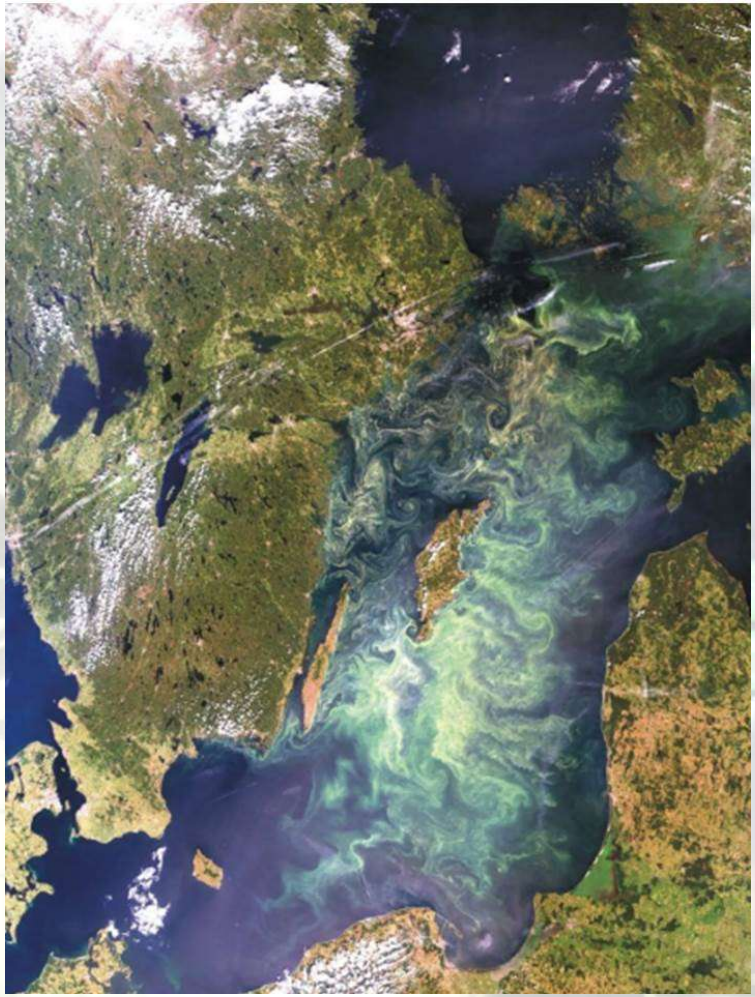

Eutrophication (Greek: *eutrophia* (from *eu* "well" + *trephein* "nourish".); German: *E utrophie*), or more precisely **hypertrophication**, is the depletion of oxygen in a body of water, which kills aquatic animals. It is a response to the addition of excess nutrients

60% of Baltic sea is dead because of eutrophication

Environmental benefits

- 25% Reduction in use of phosphorus
- 25% Reduction in use of nitrogen
- 50% Reduction in ammonia emission
- 20% Reduction in CO_2 emission
- 20% Reduction in air particle pollution
- Odour reduction

Stop Eutrofication!

SyreN Crystal Project: Development partners

Horizon 2020 partners for R&D project wanted!

SFS-30-2017:

Closing loops at farm and regional levels to mitigate GHG emissions and environmental contamination - focus on carbon, nitrogen and phosphorus cycling in agro-ecosystems

Tak for opmærksomheden
Thank you for your attention